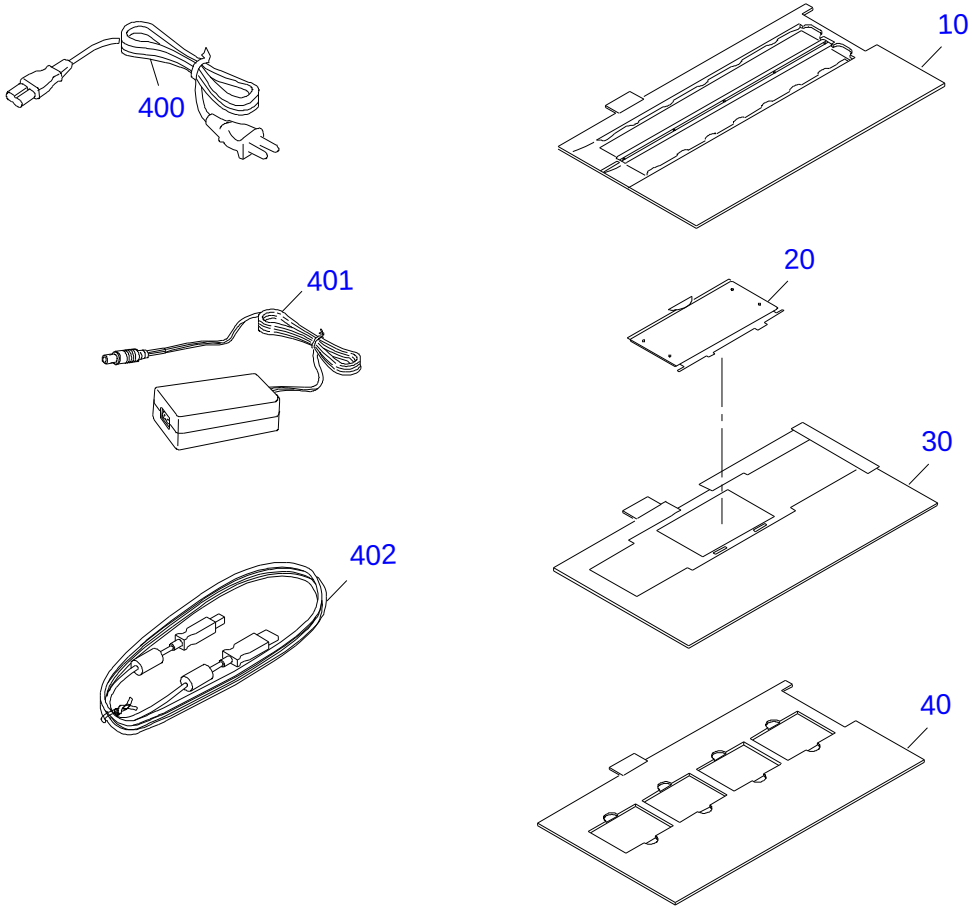

GT-9400UF / PERFECTION 3170 PHOTO NO.1 Rev.01 B161-ACCE-011

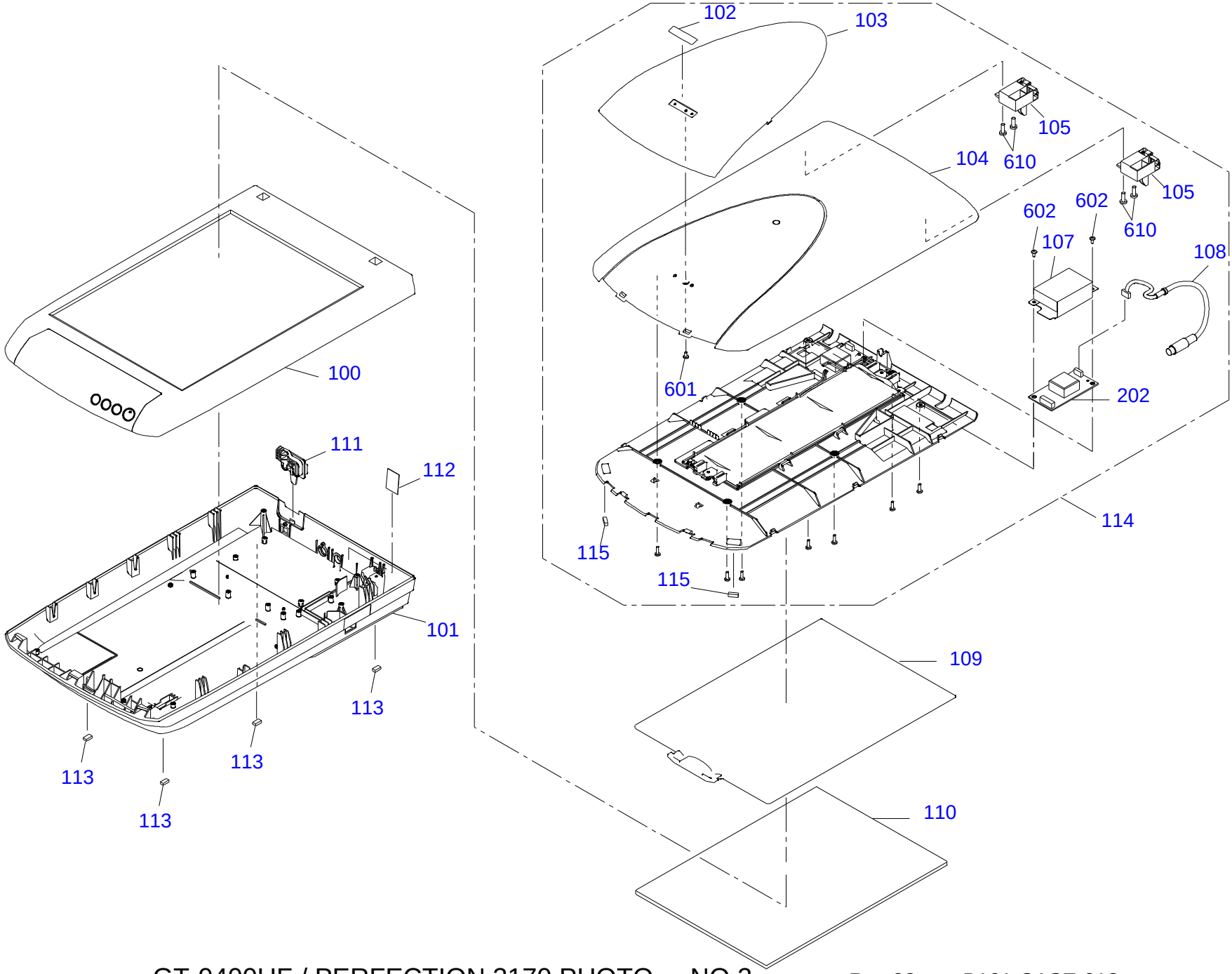

GT-9400UF / PERFECTION 3170 PHOTO NO.2 Rev.02 B161-CASE-012

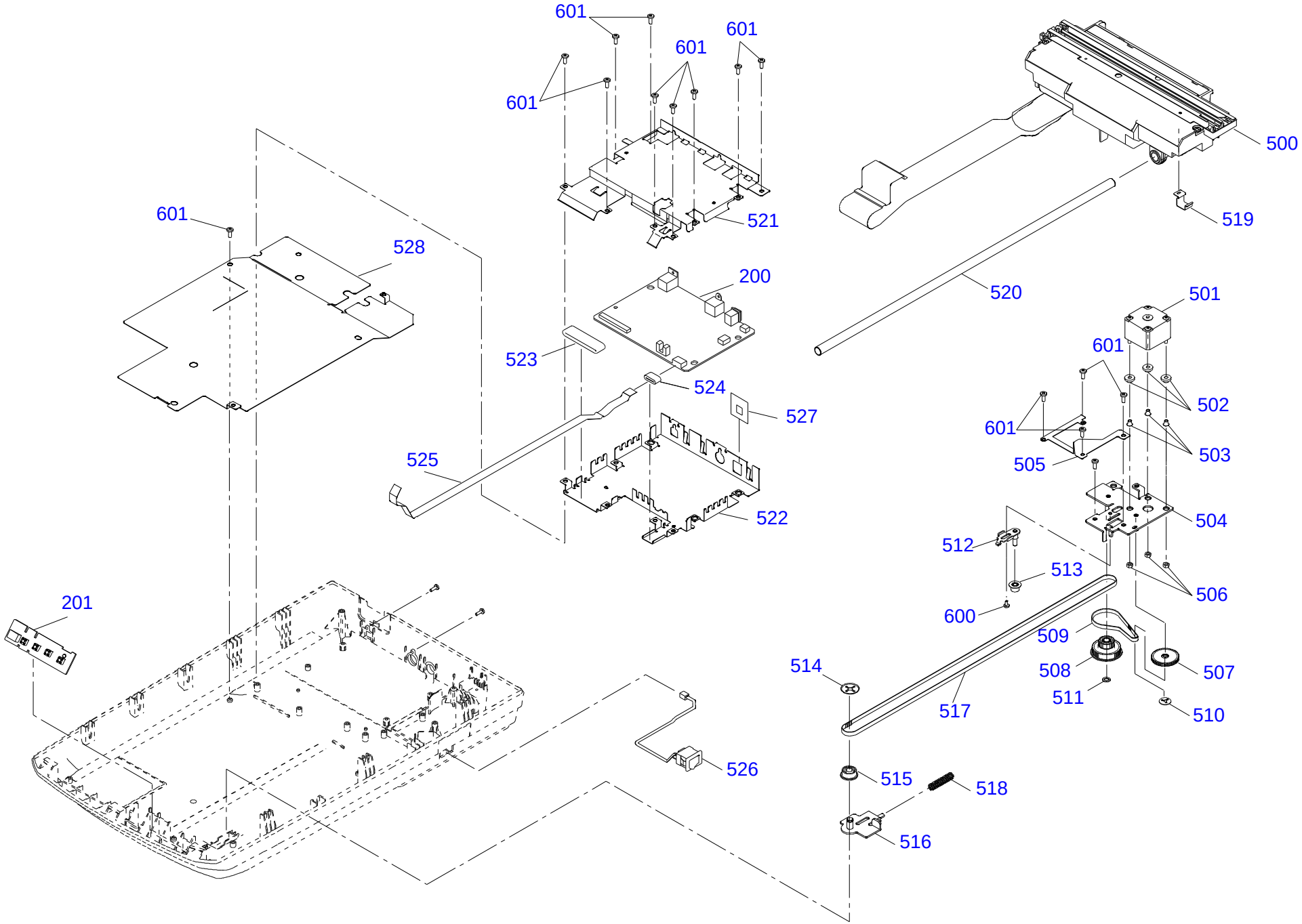

GT-9400UF / PERFECTION 3170 PHOTO NO.3 Rev.01 B161-MECH-011