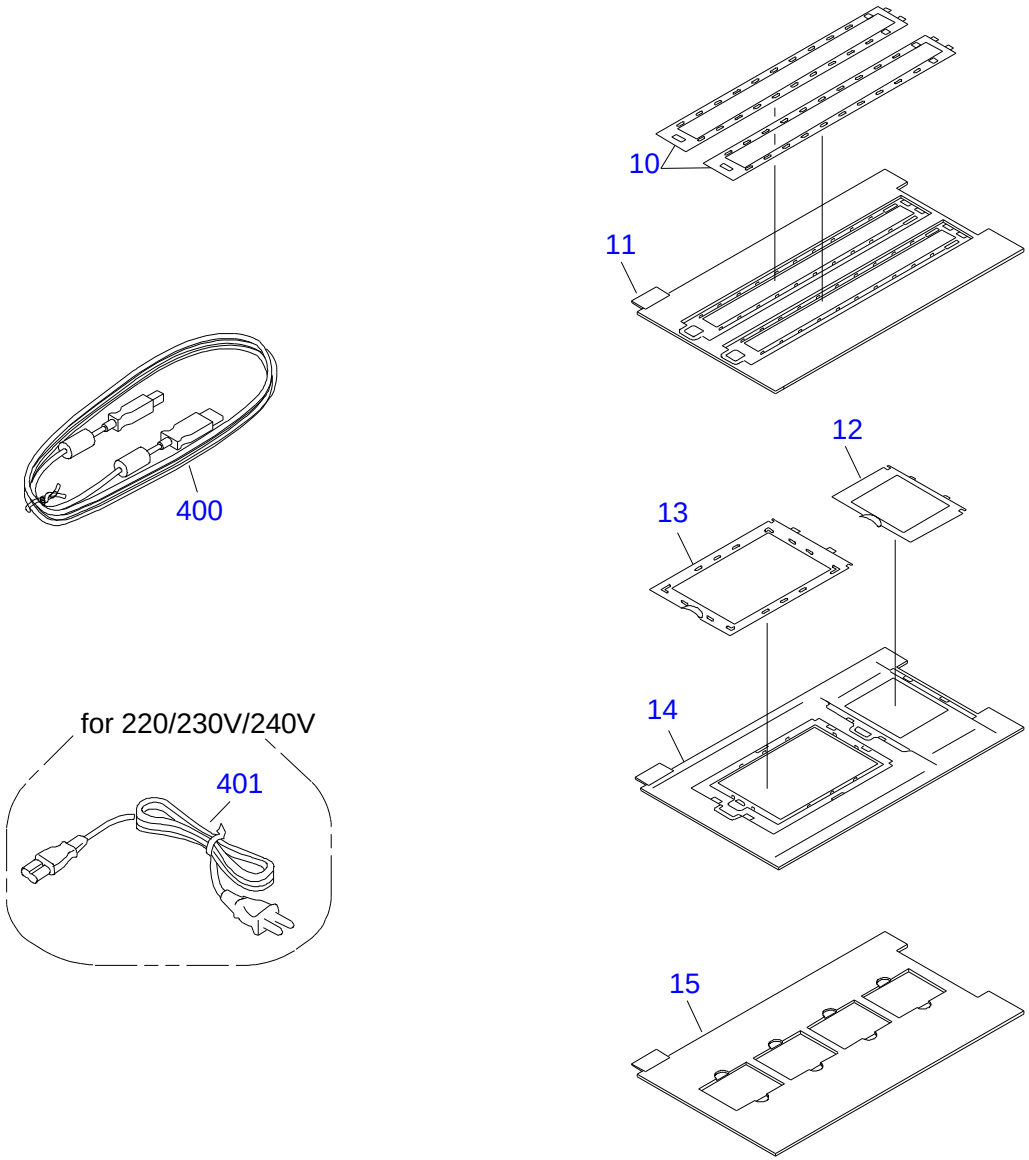
10
11
12
13
14
15
400
for 220/230V/240V
401

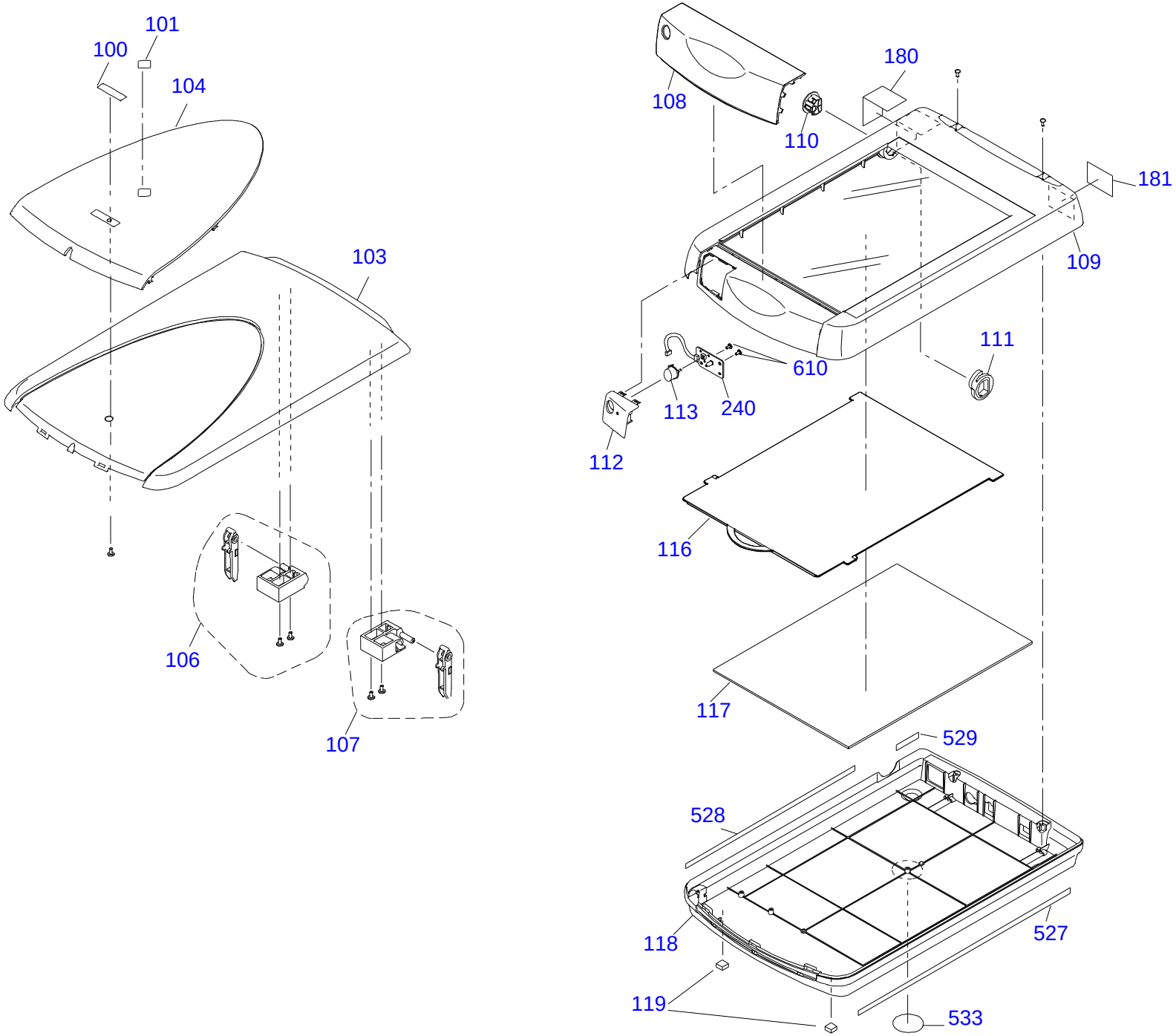

FOR GT-9800F/PERFECTION 3200PHOTO NO.2 REV.01 B156-CASE-001

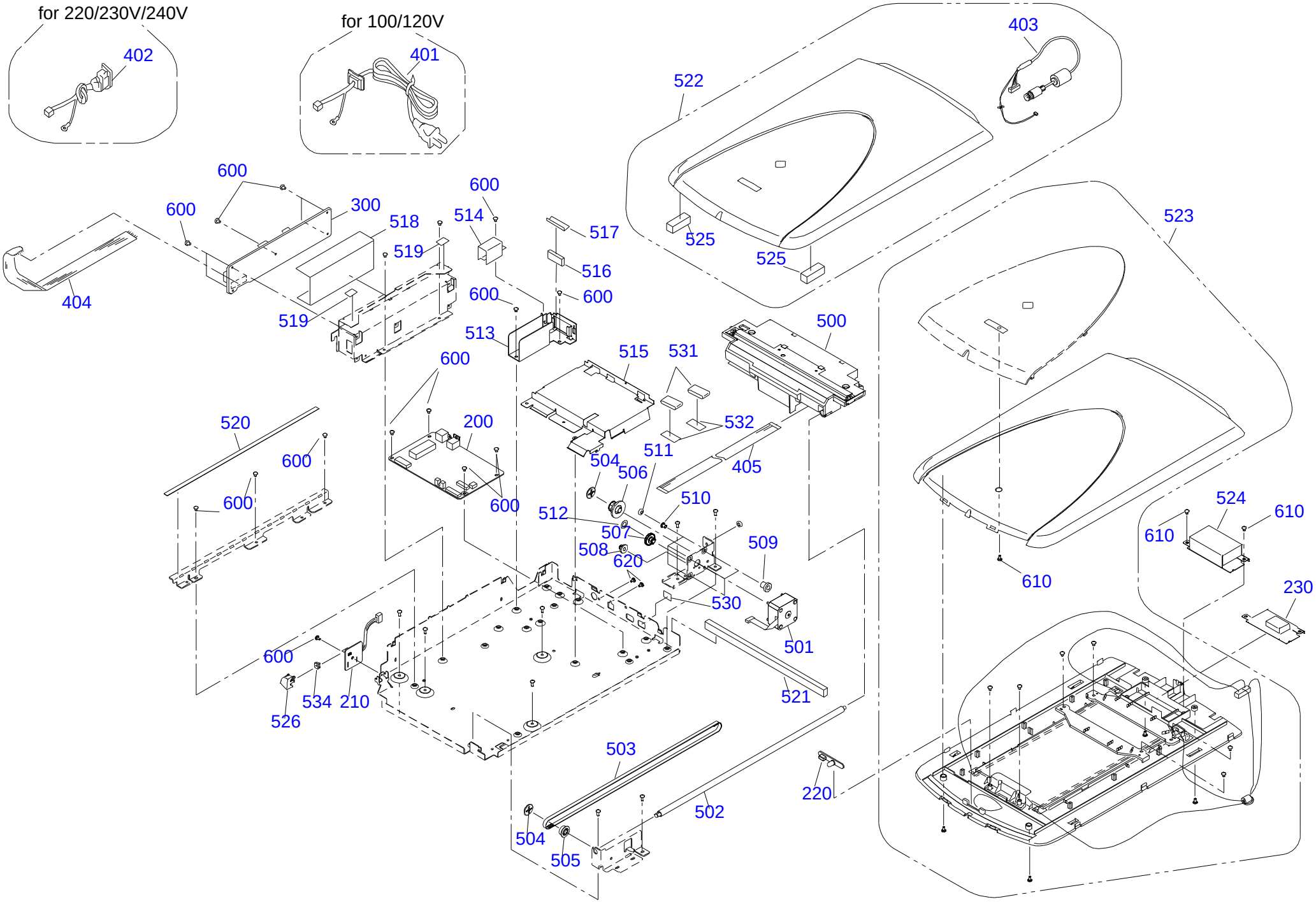

PERFECTION 3200PHOTO NO.3 REV.01 B156-MECH-001E

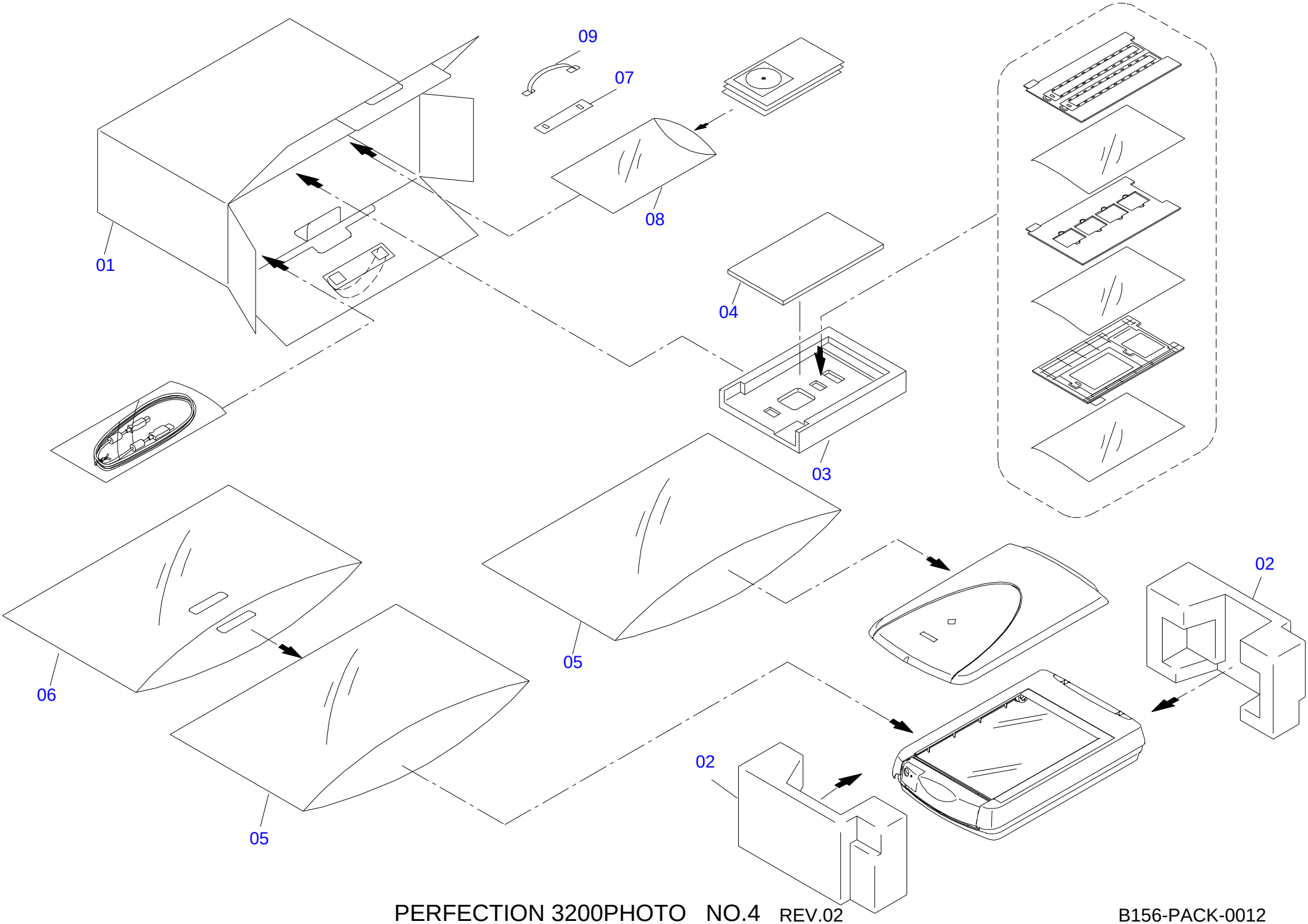

PERFECTION 3200PHOTO NO.4 REV.02

B156-PACK-0012