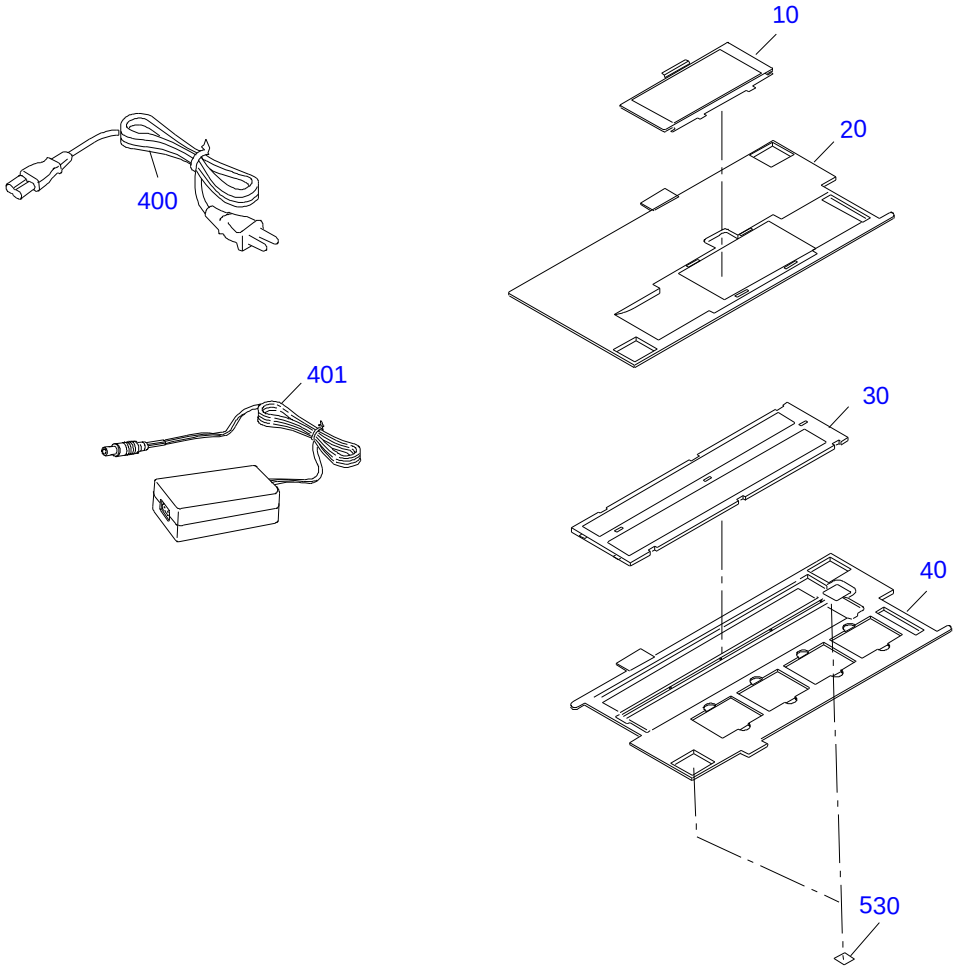

GT-X750 / Perfection 4490 Photo NO.1 Rev.03 B176-ACCE-0013

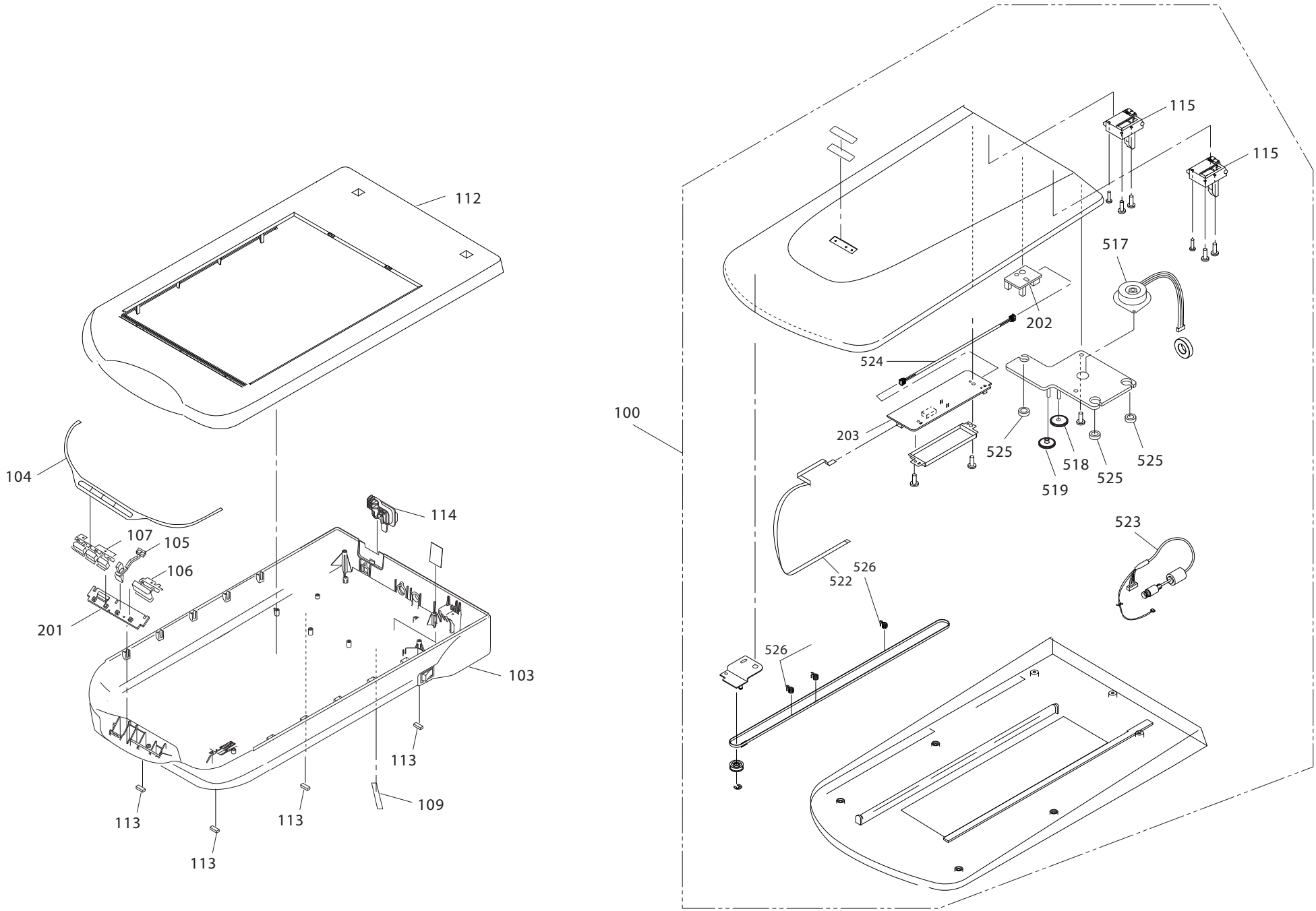

GT-X750 / Perfection 4490 Photo NO.2 Rev.01 B176-CASE-001

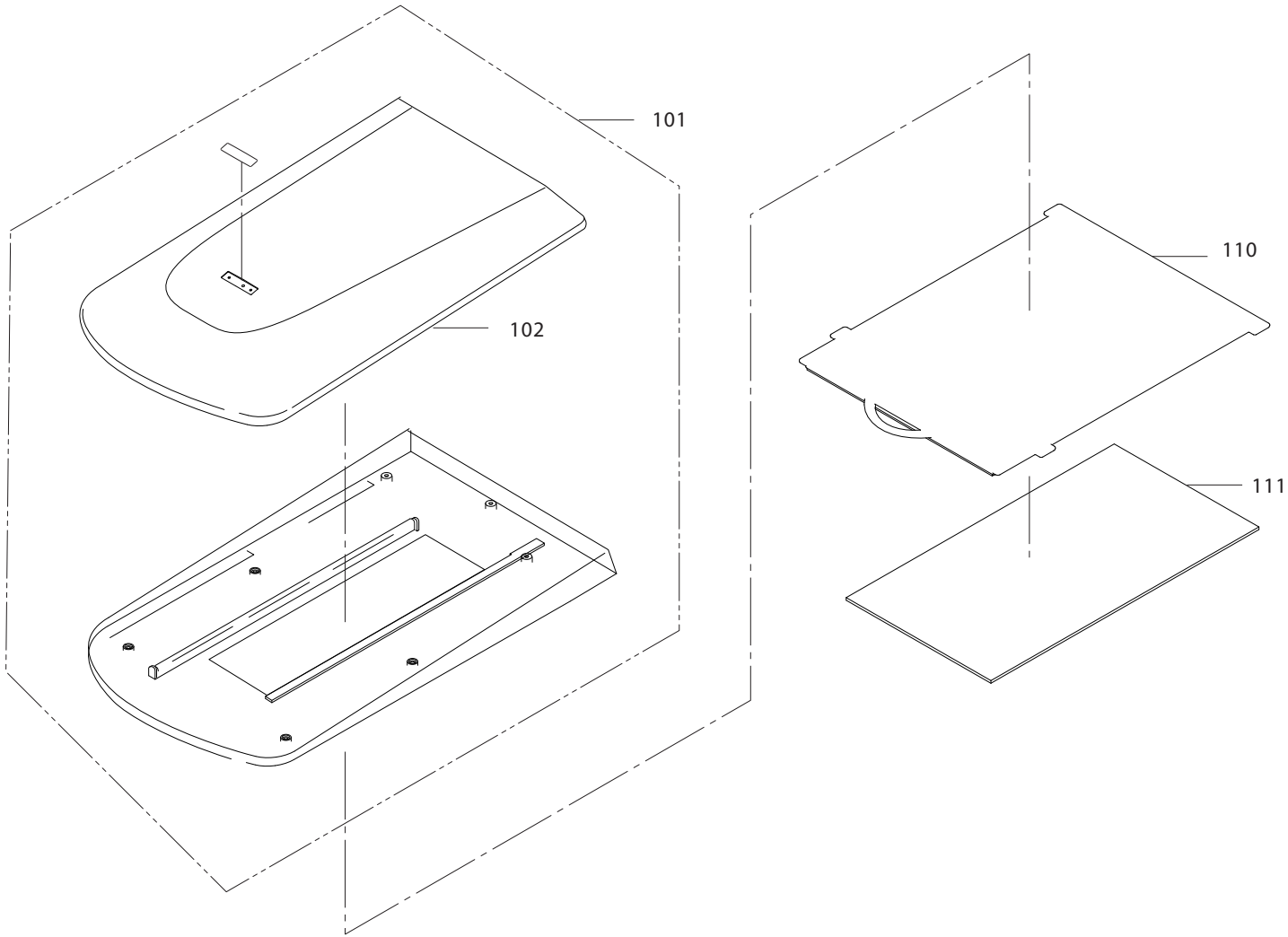

GT-X750 / Perfection 4490 Photo NO.3 Rev.01 B176-CASE-002

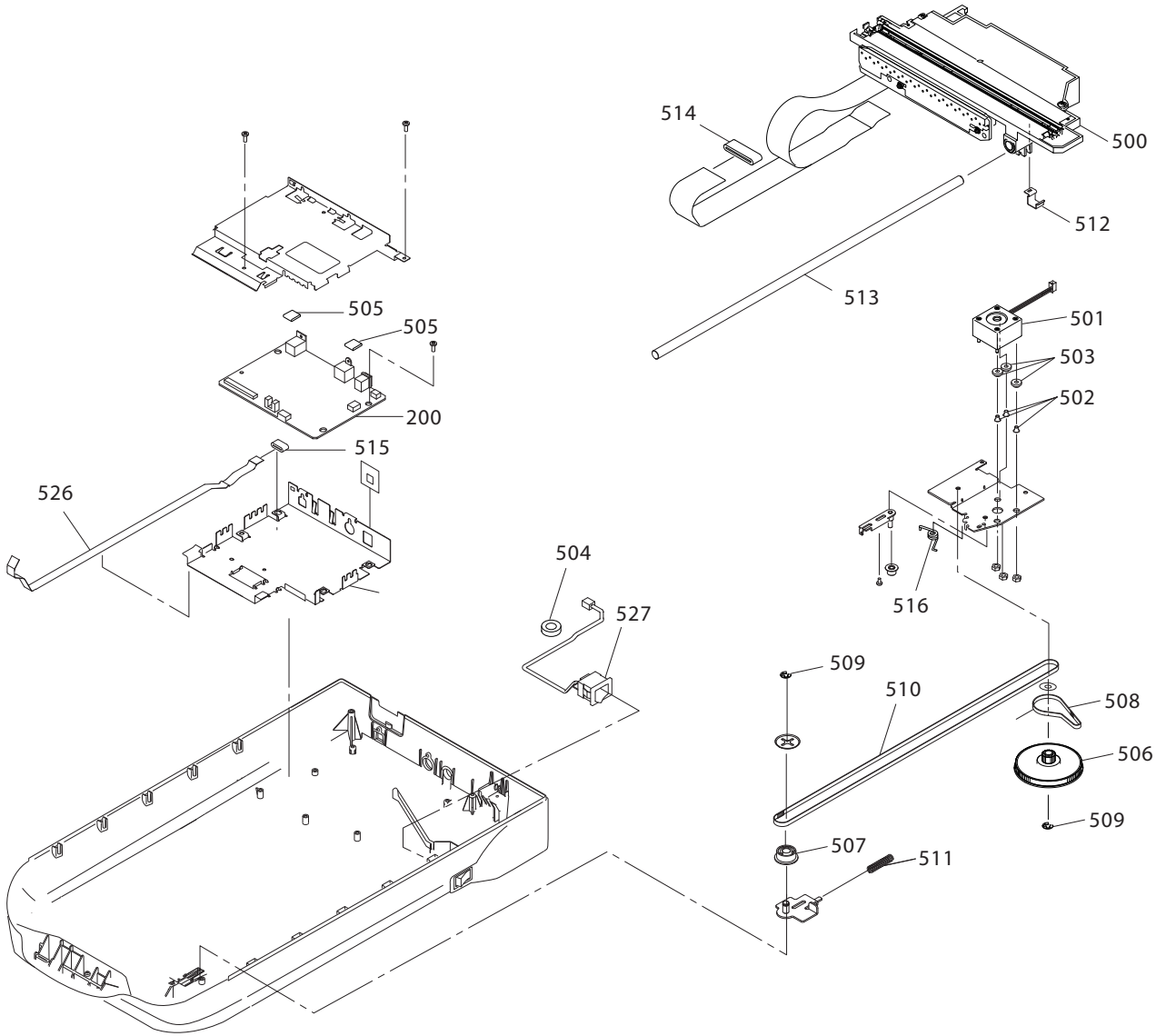

GT-X750 / Perfection 4490 Photo NO.4 Rev.01 B176-MECH-001