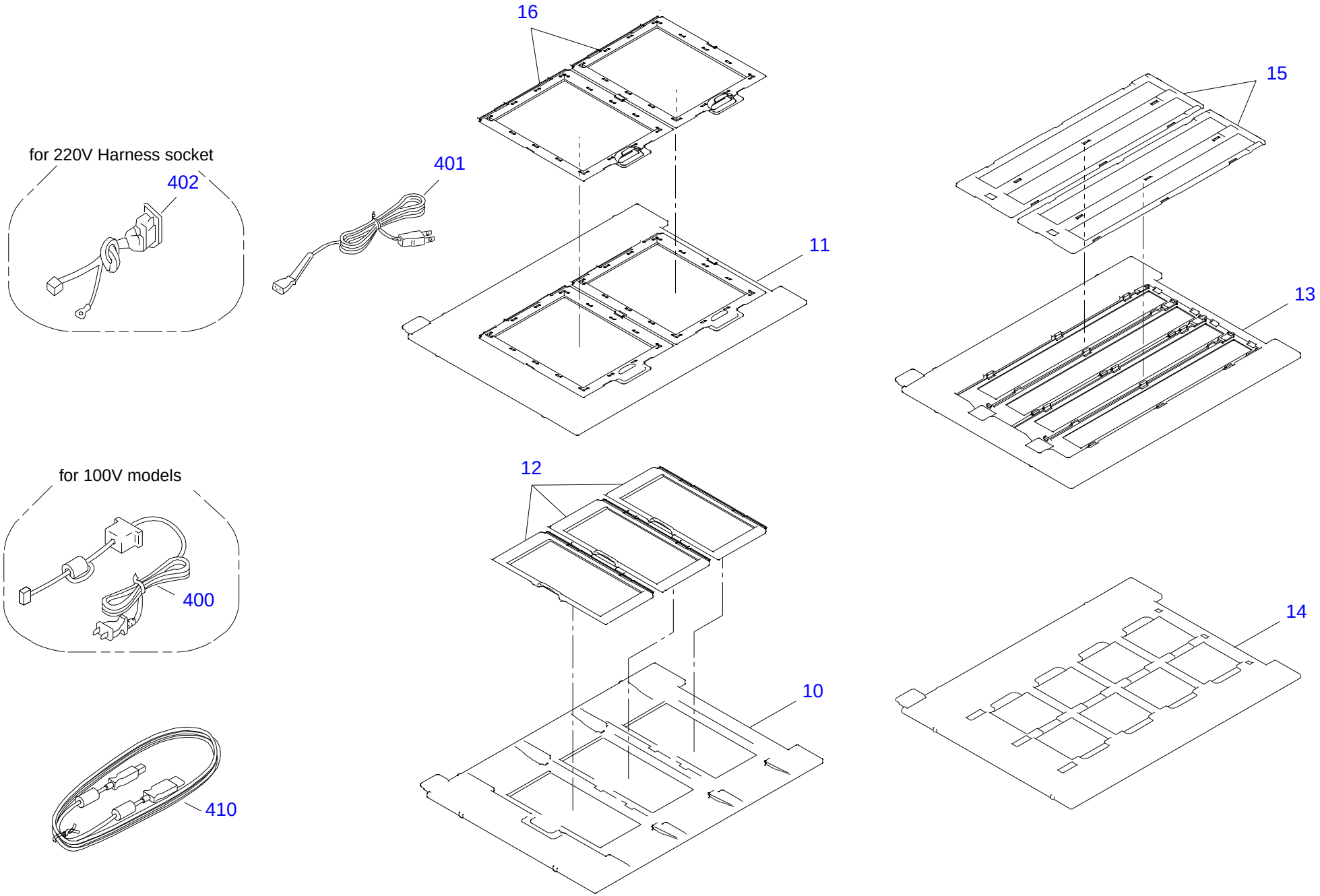

GT-X700 / PERFECTION 4870 PHOTO / 4870 PRO NO.1 Rev.01 B163-ACCE-011

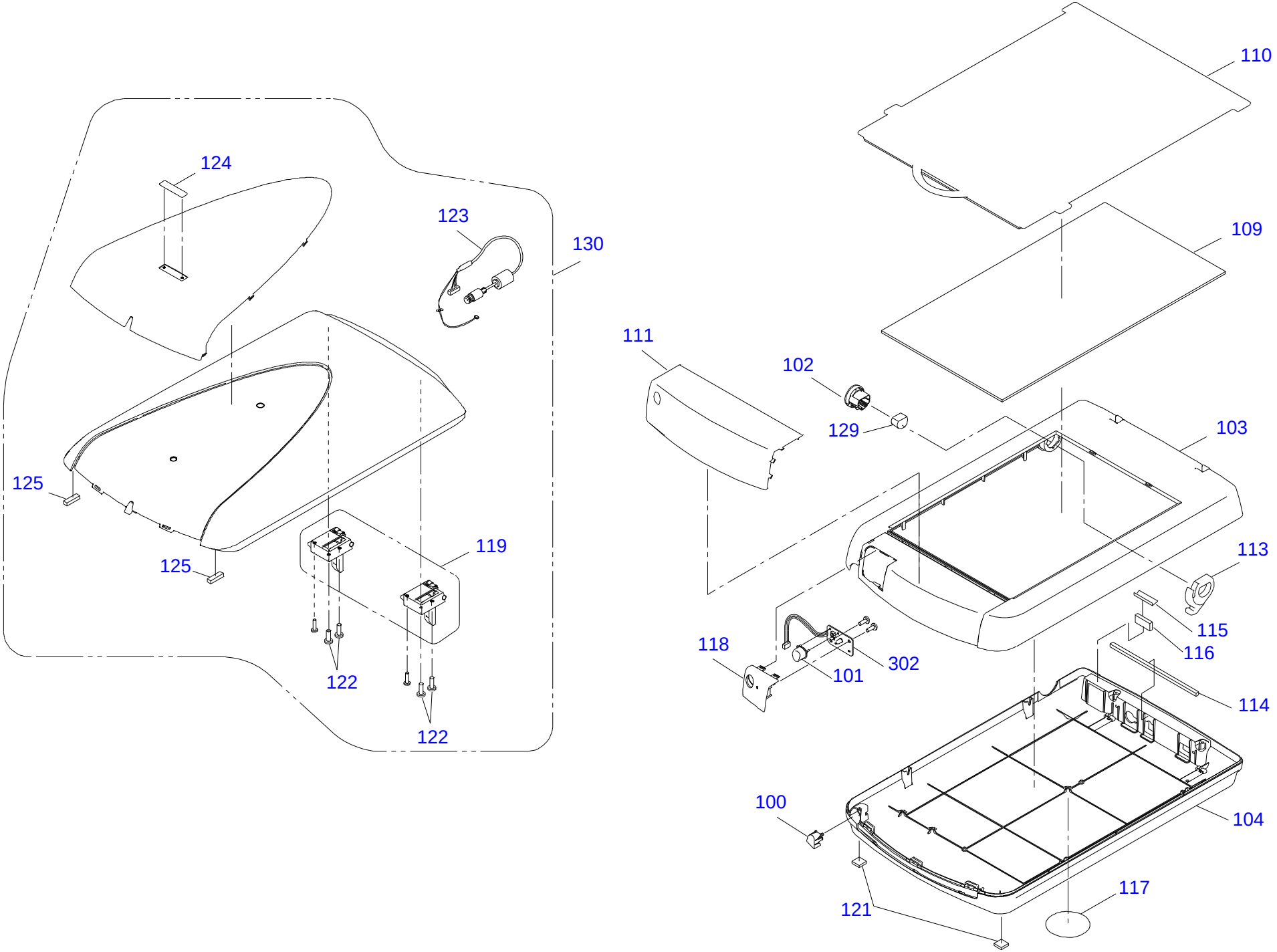

GT-X700 / PERFECTION 4870 PHOTO / 4870 PRO NO.2 Rev.01 B163-CASE-011

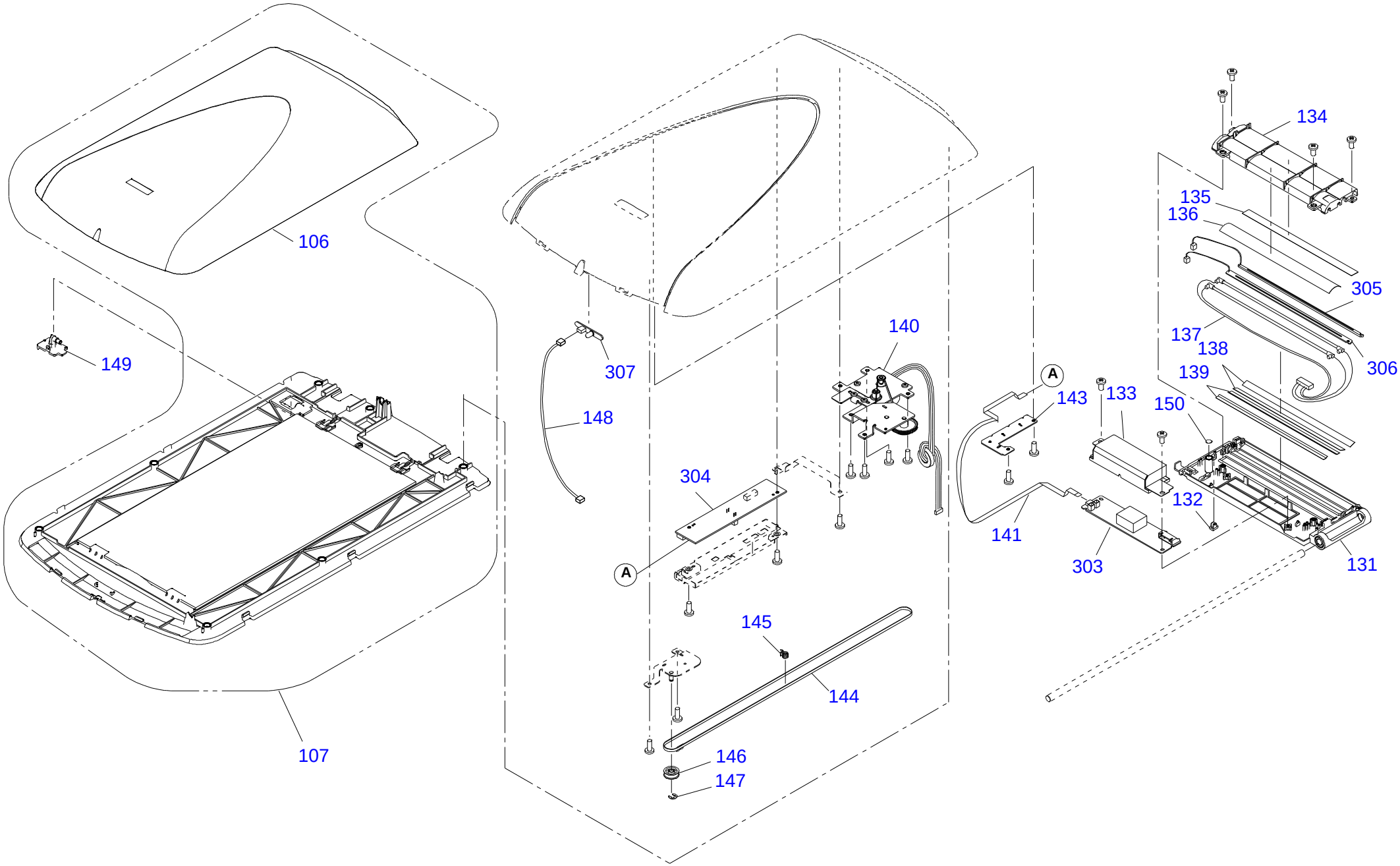

GT-X700 / PERFECTION 4870 PHOTO / 4870 PRO NO.3 Rev.01 B163-CASE-021

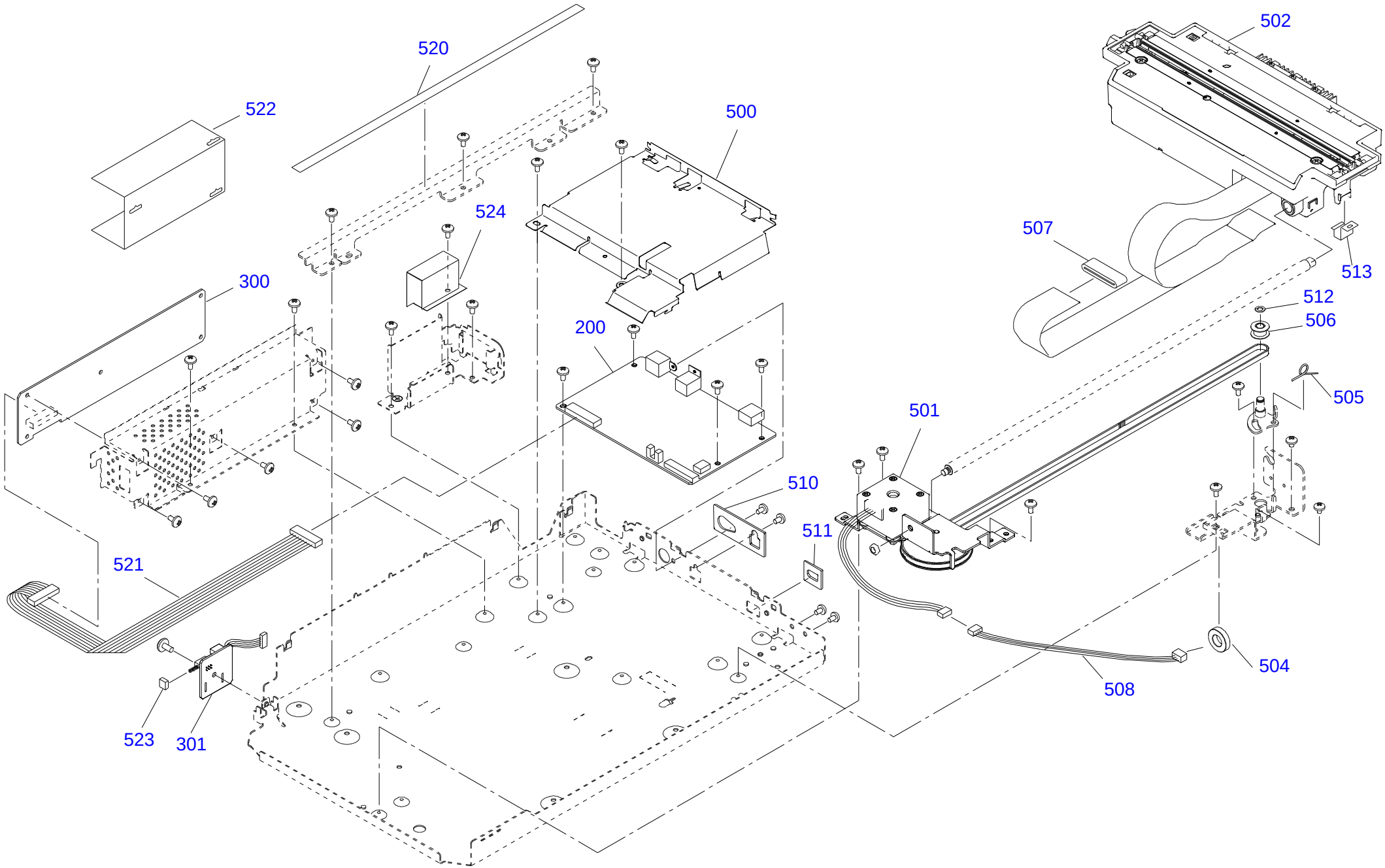

GT-X700 / PERFECTION 4870 PHOTO / 4870 PRO NO.4 Rev.01 B163-MECH-011