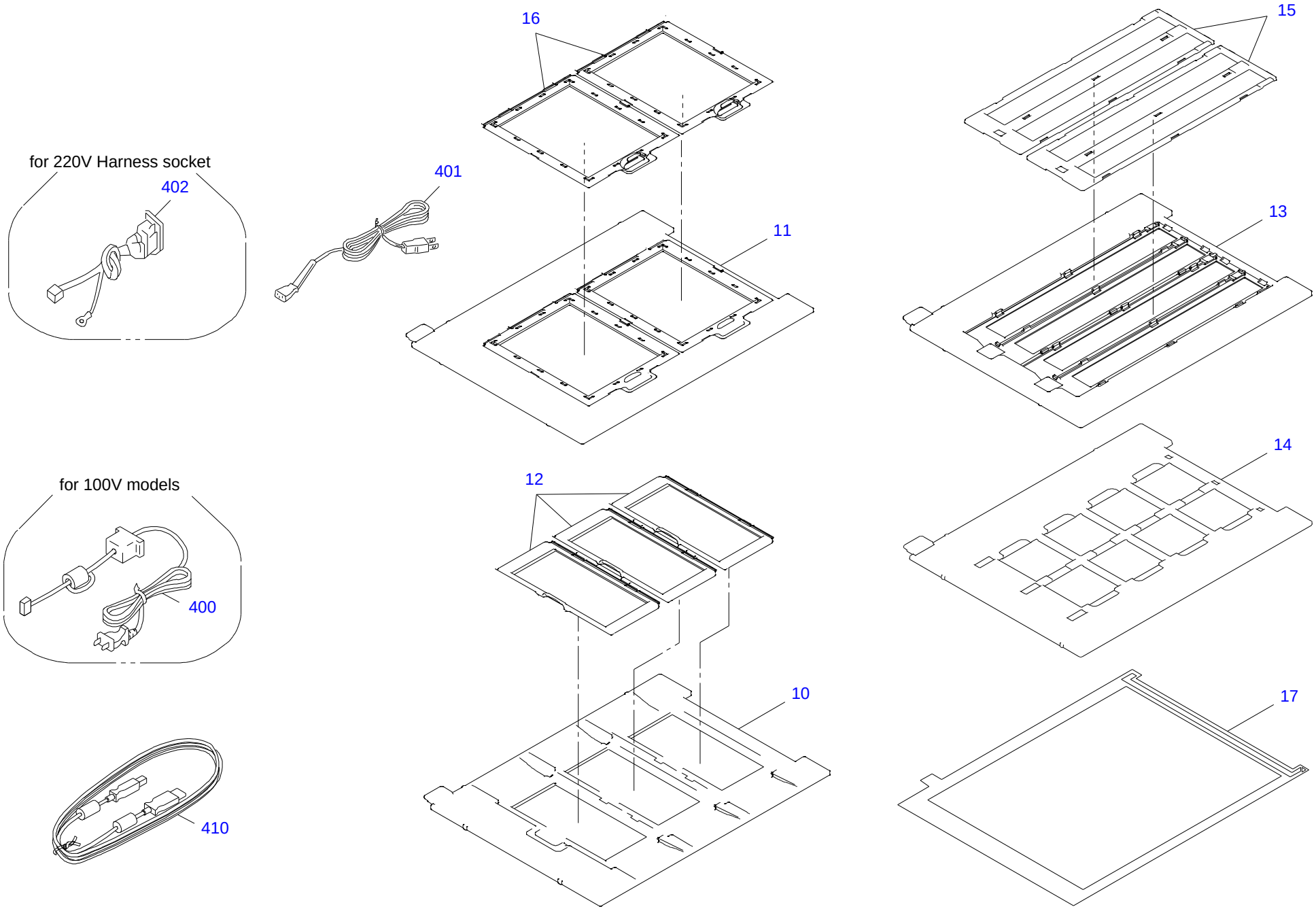

GT-X800 / PERFECTION 4990 PHOTO NO.1 Rev.02 B175-ACCE-012

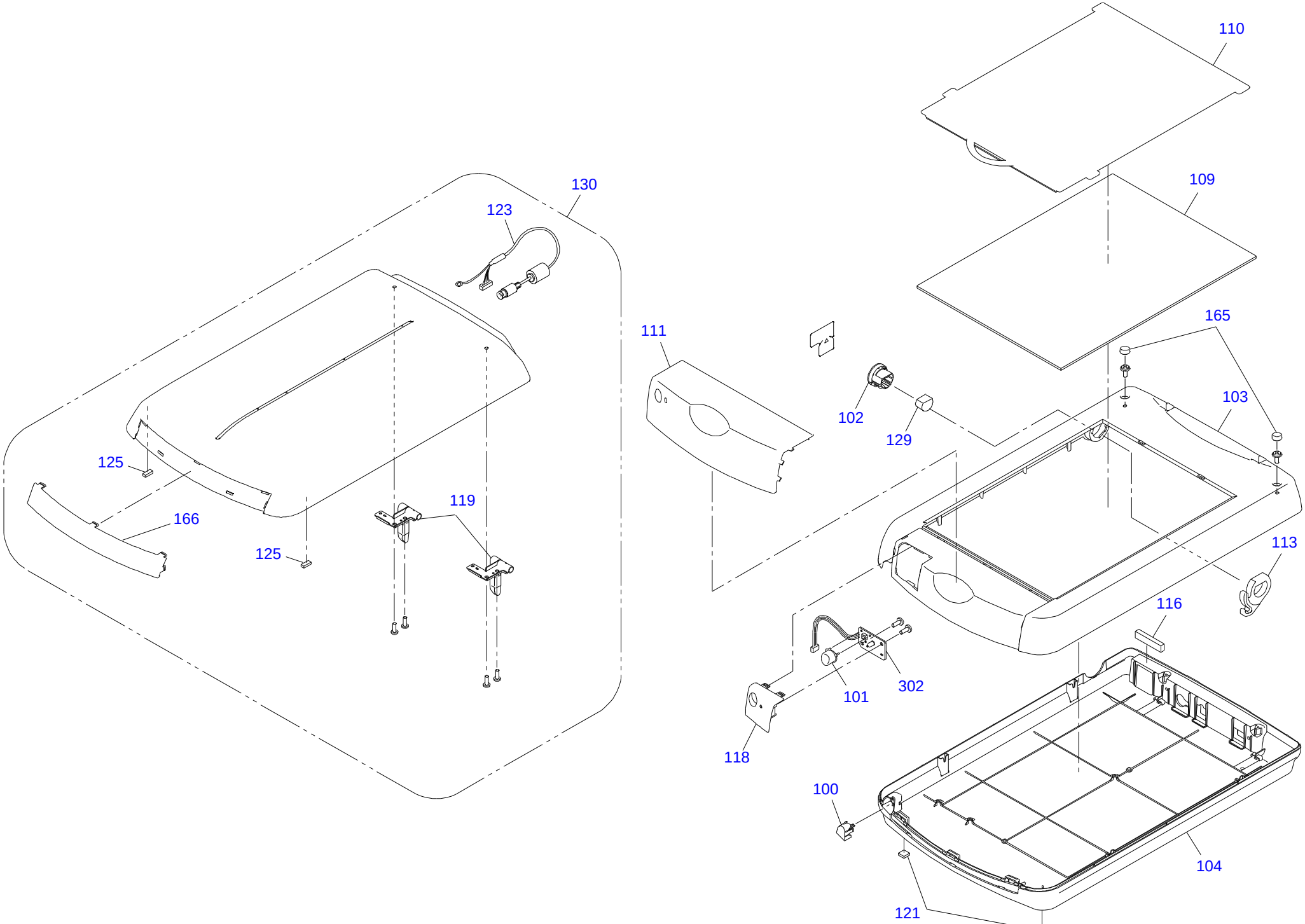

GT-X800 / PERFECTION 4990 PHOTO NO.2 Rev.01 B175-CASE-011

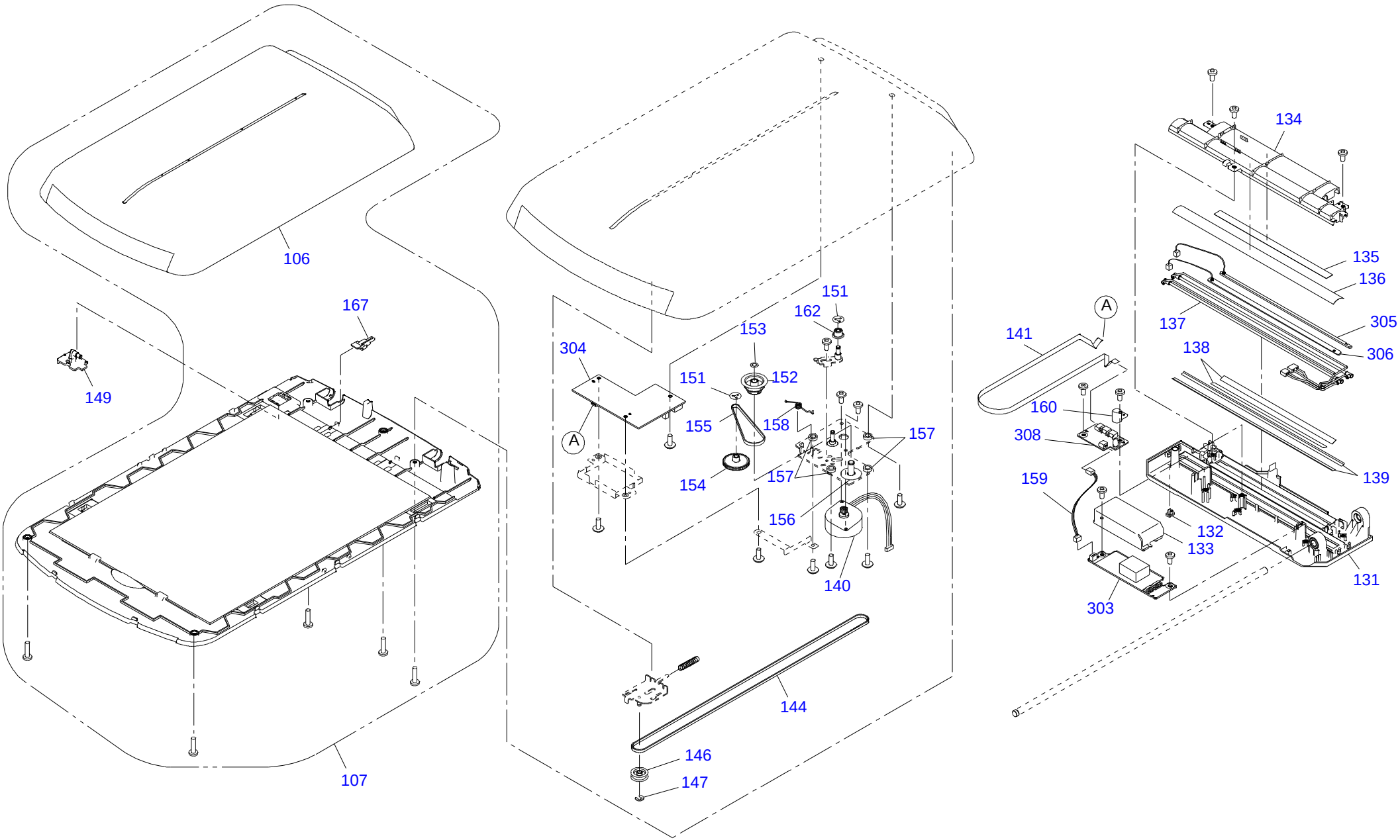

GT-X800 / PERFECTION 4990 PHOTO NO.3 Rev.01 B175-CASE-021

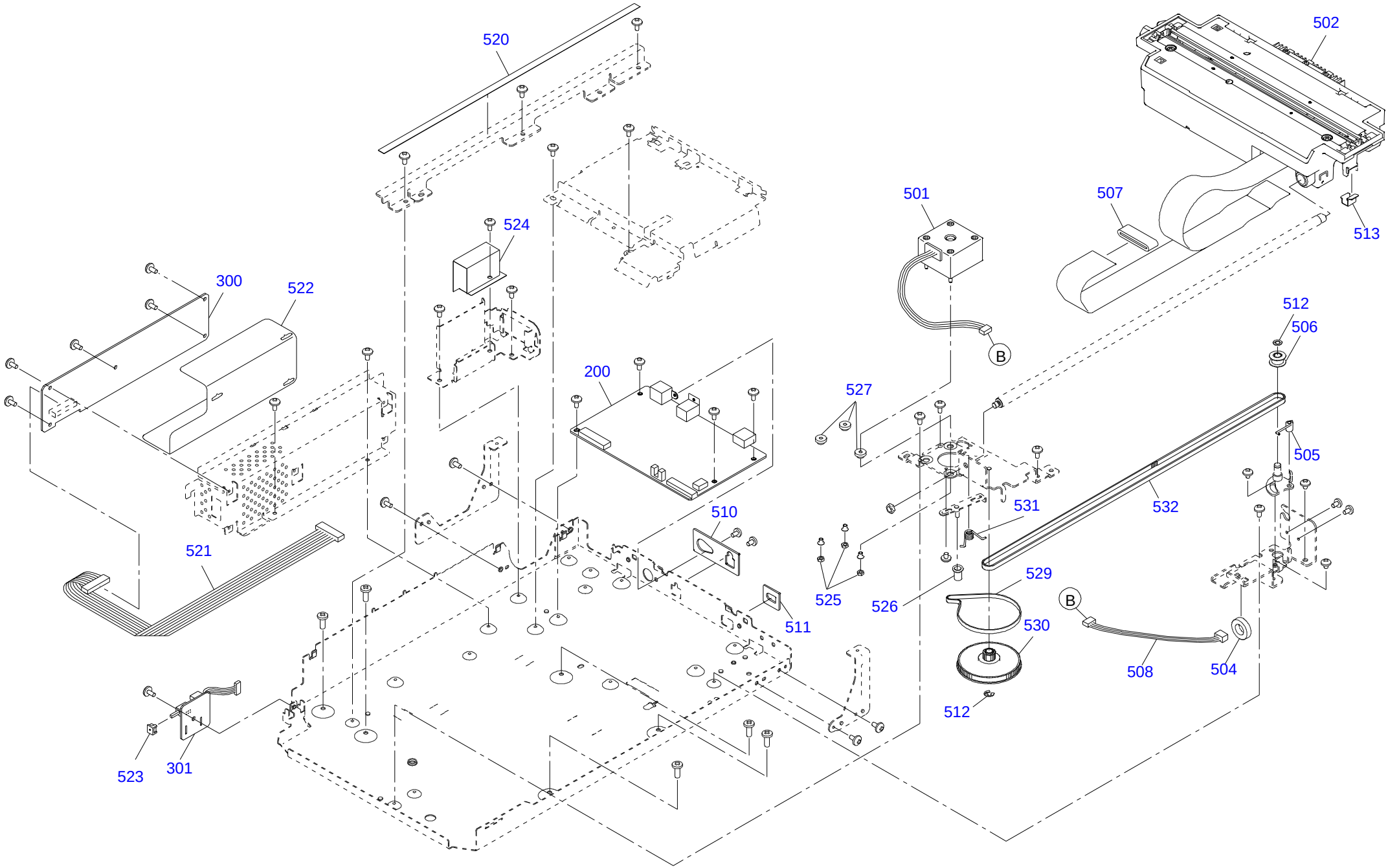

GT-X800 / PERFECTION 4990 PHOTO NO.4 Rev.01 B175-MECH-011